PRE-PROJECT TECHNICAL REPORT

Candidate: Pedro Coelho Tagliaferro
Position: Hardware-Electronics

This pre-project has, as its main objective, the development of a high level multi-channel acquisition system. The requirements are as following:

Parameter	Value
Maximum input amplitude	±25 V
Input type	AC or DC
Maximum signal frequency	45 kHz
Dynamic Range	105 dB
Number of channels	4, isolated
Acquisition Method	Synchronous between channels
channel-to-channel isolation	Minimum 30V
Supply voltage	24 V
Data/control interface	To be defined

TOPOLOGY AND INITIAL CONSIDERATIONS

The requirement for four isolated channels was the primary design constraint. Consequently, four independent power domains were implemented, dedicating one to each channel. Given that multiple voltage levels were required per channel, dedicated voltage regulators were employed to ensure all power needs were met. Further details regarding power distribution will be discussed later in this report.

This architecture guarantees the required minimum 30V channel-to-channel isolation. To interface with the microcontroller, a digital isolator was utilized. This allows the safe routing of signals across the different ground references (GNDs) of each channel while strictly maintaining the isolation requirement.

Following these architectural guidelines, the processing of sensor information for each channel was structured into a three-stage signal chain:

- Signal Conditioning;
- Signal Conversion;
- Signal Acquisition.

This sequence is illustrated in the block diagram below:

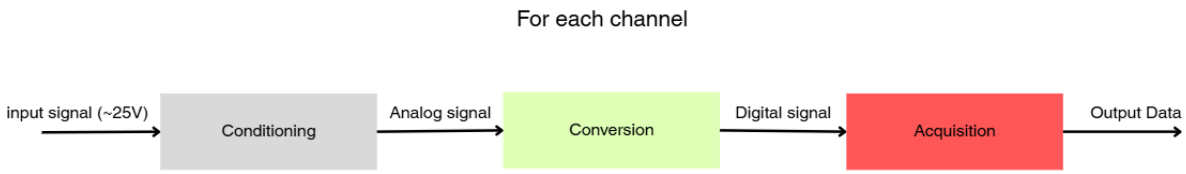

SIGNAL CONDITIONING

The signal conditioning stage processes the ±25V input into a suitable format for the next stages. The first challenge encountered was the high input voltage level. To address this, a voltage divider with an attenuation factor of 1/5 was implemented, scaling the amplitude down from a 25V peak to a 5V peak.

The output of the divider is buffered by an ADA4898 operational amplifier, which feeds directly into a third-order Butterworth low-pass filter utilizing the same OpAmp model. The ADA4898 was selected due to its dynamic characteristics, including high speed and ultralow distortion. This low-pass filter plays a critical role in the conditioning stage by acting as an anti-aliasing filter, attenuating high-frequency noise before the signal is discretized.

To ensure compatibility between the bipolar ±5V output of the low-pass filter and the absolute input voltage limits of the conversion stage, an additional step was implemented using a Fully Differential Amplifier (FDA) stage with the THS4551. This stage acts as a single-ended to differential converter, configured with an attenuation gain of 0.5 in order to compress the 10Vpp signal into a 5Vpp differential output.

Another aspect of the conditioning stage is the power distribution. The S214 DC-DC converter was chosen to power the operational amplifiers due to its bipolar output capability. Providing ±12V supply rails ensures that the conditioned ±5V signal does not saturate, maintaining a margin from the OpAmp's voltage limits. Finally, the other two voltage regulators (TRS1-2433 and LT3042) are used to supply the FDA and digital components while maintaining isolated ground planes, enforcing the channel-to-channel isolation requirement.

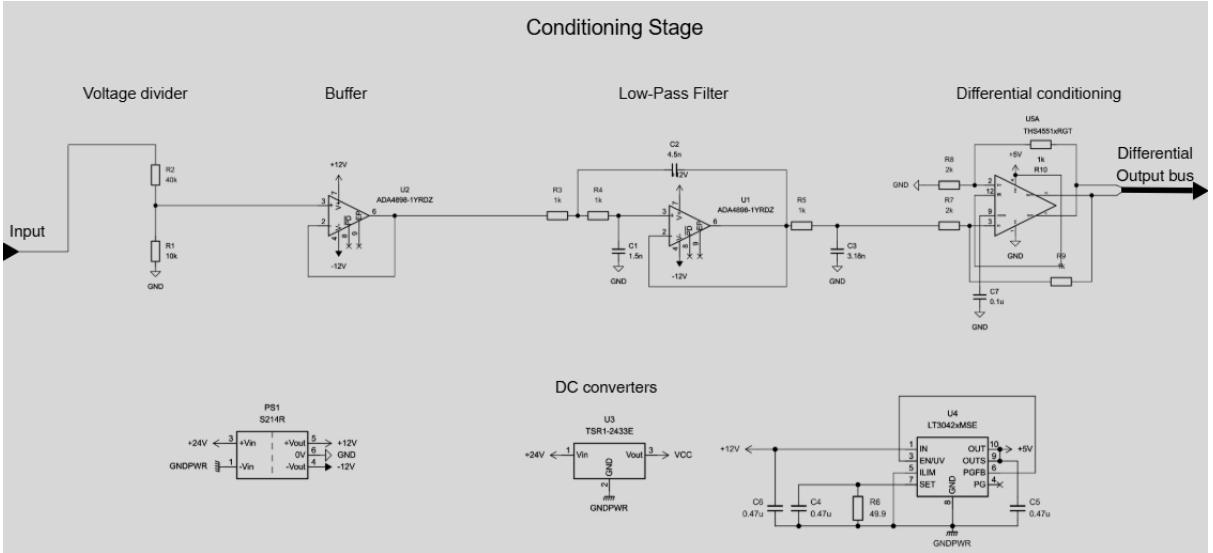

SIGNAL CONVERSION

The analog to digital conversion is performed by the ADS127L11. This component was selected due to its ability to operate at high sampling rates (up to 400 kSPS) while maintaining a 24-bit resolution. This high resolution is an important feature, as the converter's Effective Number of Bits (ENOB) comfortably satisfies the 105 dB dynamic range constraint.

The conversion stage is also responsible for bridging the individual isolated channels to the Microcontroller Unit (MCU). To achieve this, the ISO7762 six-channel digital isolator was implemented. This specific isolator was chosen due to its high-speed data rate capabilities and the exact number of channels required to handle the SPI bus and control lines. Each analog channel features its own dedicated isolator, enabling the communication between the ADC and the MCU. The block diagram for the conversion stage is illustrated below:

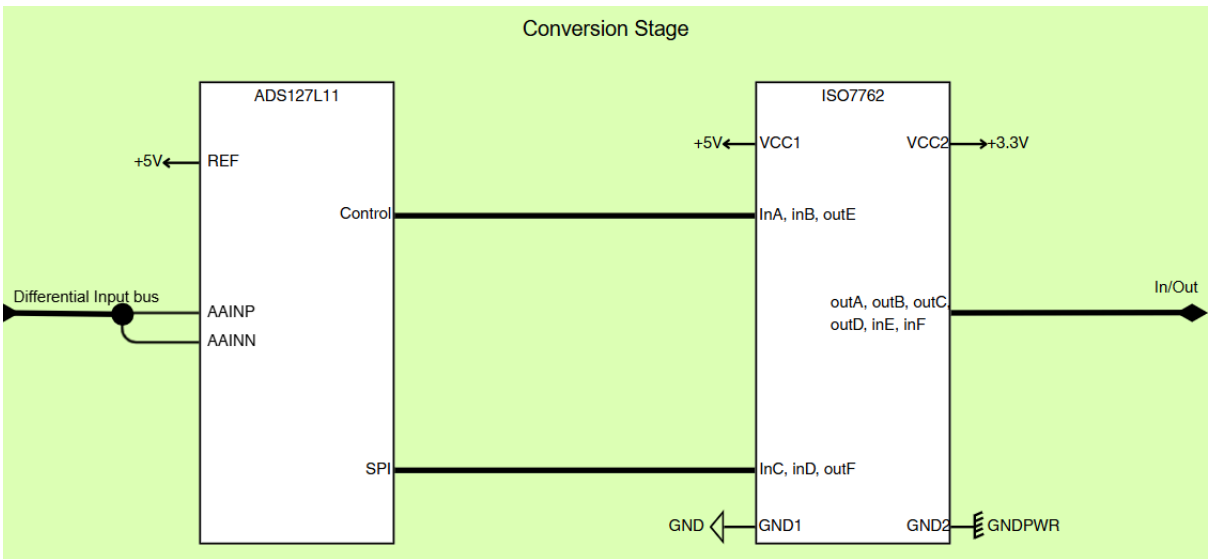

SIGNAL ACQUISITION

The Serial Peripheral Interface (SPI) protocol was selected for the data transmission between the ADCs and the microcontroller. This choice was made due to SPI being an industry standard, ensuring straightforward implementation. Also, being a synchronous communication interface, capable of operating at high clock frequencies, makes the synchronous acquisition possible.

The STM32G4 microcontroller was selected for the acquisition stage. The main characteristic for this choice is the four independent SPI buses, which enables the simultaneous reading of all four channels, guaranteeing synchronous data acquisition. There is also an integrated Direct Memory Access (DMA) controller that ensures high-speed data transfers directly to memory with low CPU overhead.

In this configuration, the MCU is capable of acquiring data from all channels concurrently. This is achieved because the Master Clock and the conversion START commands are shared across the four channels.

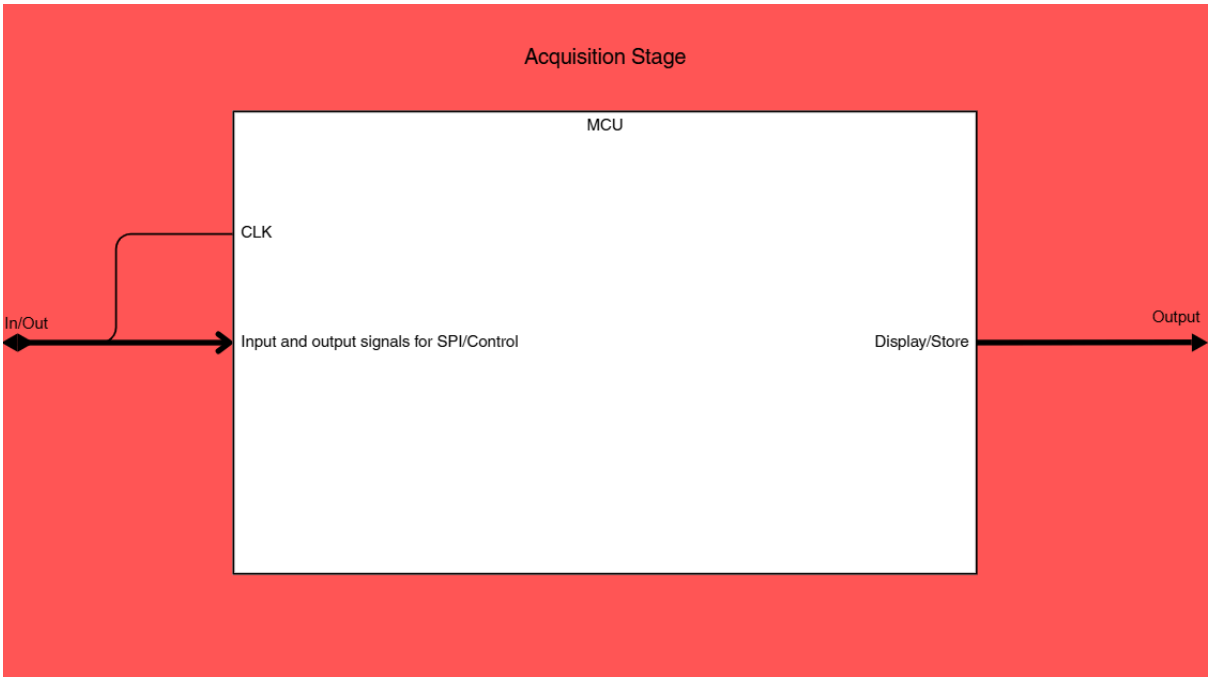

OVERALL

The development of this data acquisition topology successfully addresses constraints shown in the initial system requirements. By implementing a signal conditioning chain, the hardware safely attenuates and actively filters the ±25V input signals, matching the strict input limits of the high-resolution ADS127L11 converters.

Furthermore, the combination of independent power domains and dedicated digital isolators enforces the mandatory channel-to-channel isolation without compromising high-speed data integrity. Finally, the selection of the STM32G4 microcontroller guarantees a

precise, simultaneous, and highly efficient synchronous acquisition across all four channels with almost zero CPU overhead.

In summary, the designed architecture results in a data acquisition system, capable of meeting the demanded specifications.

The following block diagram shows the simplified topology, differentiating analog and digital signals (continuous and dotted lines) and different power domains (with the white cuts representing the isolation between the parts).
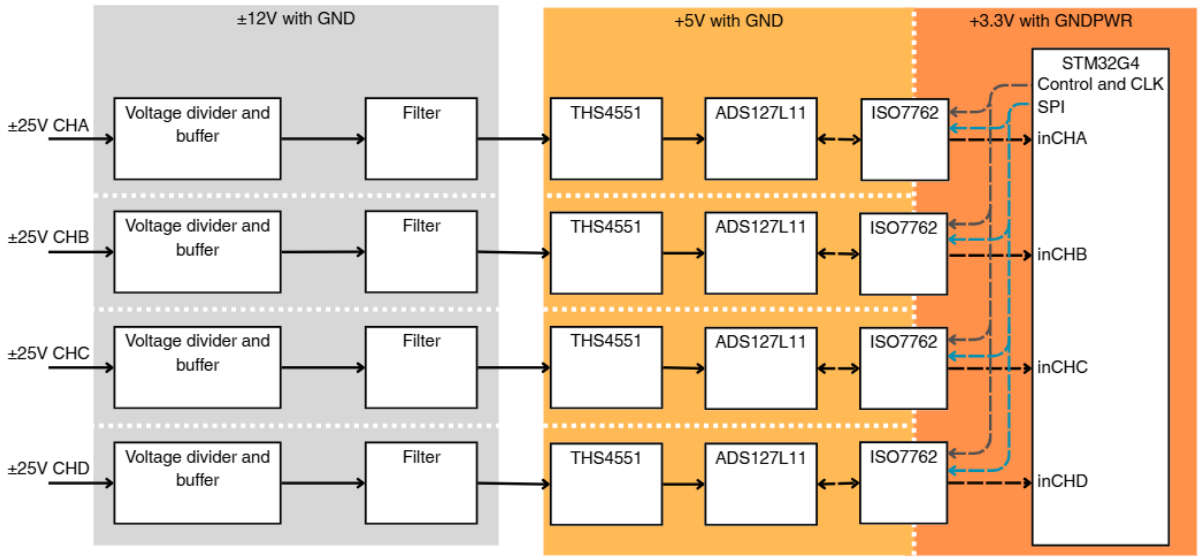
Full diagram (regarding the power supply and type of signal)